221

MODEL NO	F1 (N)	Fi VERİM (YIELD) (F1)	AÇI (ANGLE) (± 5 °)	AĞIRLIK (WEIGHT) (gr ±%2)
221-2	2500	5:1	120°	240
221-4	7000	5:1	120°	940
221-6	11000	5:1	120°	1820

F1 : BASKI KUVVETI (EXERTING FORCE) , Fi : UYGULAMA KUVVETI (APPLIED FORCE)

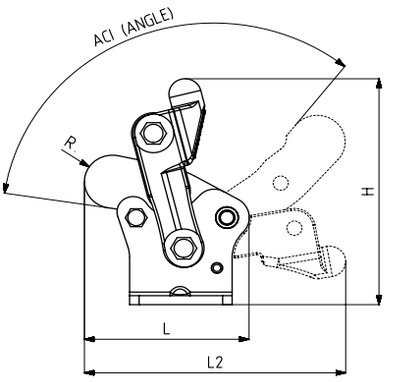

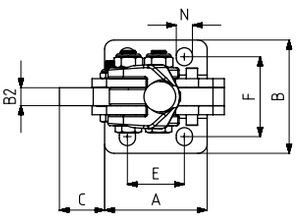

Ayak Tipi: Yatay Tabanlı
Body Mounting Base: Horizontal

221-L
Sayfa/Page: 25

241
Sayfa/Page: 32

921
Sayfa/Page: 122

MODEL NO	A	B	B2	C	E	F	H	L	L2	N	R
221-2	36	48,5	6	17,5	20	32	72	56	90	6,5 x 8,5	9,5
221-4	54	63	10	16	30	44,5	126	79	138	8.5 x 10	15
221-6	70	74	12	32	45	52	159	112	188	10.5 x 11.5	18

221-L

MODEL NO	F1 (N)	Fi VERİM (YIELD) (F1)	AÇI (ANGLE) (± 5 °)	AĞIRLIK (WEIGHT) (gr ±%2)
221-4-L	7000	5:1	100°	1070
221-6-L	11000	5:1	100°	2025

F1 : BASKI KUVVETI (EXERTING FORCE) , Fi : UYGULAMA KUVVETI (APPLIED FORCE)

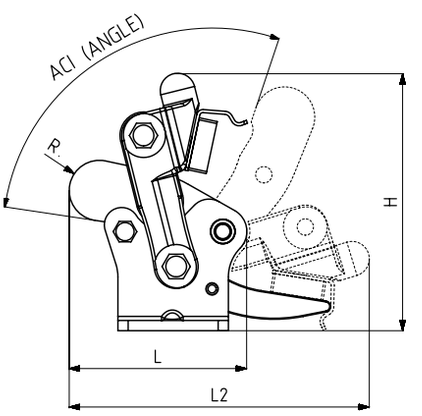

Ayak Tipi: Yatay Tabanlı (Açıkken Kilitli)
Body Mounting Base: Horizontal (Locked when open)

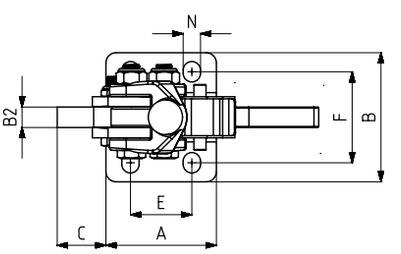

221
Sayfa/Page: 25

241-L
Sayfa/Page: 33

913
Sayfa/Page: 120

MODEL NO	A	B	B2	C	E	F	H	L	L2	N	R
221-4-L	54	63	10	16	30	44,5	126	79	138	8.5 x 10	15
221-6-L	70	74	12	32	45	52	159	112	188	10.5 x 11.5	18